BMC

DR. RER. NAT. ING. KARL A. SCHETTER

ENGINEERING COMPANY
BUILDING PHYSICS
MEASURING AND CONTROL TECHNOLOGY
COMPUTER TECHNOLOGY

DATA ACQUISITION SYSTEM MC-12

OPERATING MANUAL

Copyright Aug. 198.i by BMC DR. SCHETTER Nordendstr. 34, 8039 Puchheim/Munich

BMC DR SCHETTER Nordendstr. 34 8039 Pucheim/Munchen T. 089/802 203

Table of Contents

Forward 4
Chapter 1 5
1.1 INPUTS 5
1.2 OUTPUTS 9
1.3 MULTIMETER 10
1.4 TRANSIENT RECORDER 10
Chapter 2 11
2 .1 POWER SUPPLY 11
2-2 OPERATING TEMPERATURE 14
2-3 CONNECTION OF MEASURING SIGNALS 15
2.4 SWITCHES 16
2.5 SWITCHING BIPOLAR/UNIPOLAR 17
2.6 CONNECTING AN OSCILLOSCOPE 17
Chapter 3 18
COMMISSIONING 18
Chapter 4 21
MULTIMETER 21
Chapter 5 25
Chapter 6 37
(Re-)initialization Turning the MC-12 ON/OFF 37
Chapter 7 39
INDIVIDUAL MEASUREMENTS 39
7.1 COMMANDS FOR PARAMETER SETTING 40
7.2 MEASUREMENT COMMANDS 42
7.3 FUNCTIONS 43
7.4 EXAMPLES OF INDIVIDUAL MEASUREMENTS 45
Chapter 8 48
Chapter 9 50
9.1 COMMANDS FOR BUFFER MANAGEMENT 51
9.2 COMMANDS FOR SETTING THE SCANNING PARAMETERS 54

9.3 MEASUREMENT COMMAND 58
9.4 EXAMPLES FOR TRANSIENT MEASUREMENTS 59
Chapter 10 61
10.1 READING FROM THE BUFFER MEMORIES 62
10.2 WRITING TO THE BUFFER MEMORY 63
10.3 TRANSFORMING THE BUFFER MEMORY 65
10.4 EXAMPLES OF ACCESS TO BUFFER 67
Chapter 11 69
11.1 DISPLAY ON THE OSCILLOSCOPE 69
11.2 DISPLAY ON THE CE-150 PLOTTER 73
APPENDIX 75
Appendix A 76
Appendix B 78
Appendix C 83

Forward

The MC- 12 system is the result of a fruitful cooperation. The hardware was developed by the long-standing company BMC Dr. Schetter, the software by RVS DATENTECHNIK.

The hardware of the MC -12 system is very universally designed and therefore suitable for a wide range of applications.

Five analog inputs with variable input sensitivity, two analog outputs and four switch outputs are available. The system also contains 8K of internal memory. The entire system is independent of mains power.

You can use the MC -12 as an intelligent multimeter, data logger, or transient recorder. In many applications, it replaces a multi-channel recorder with the PC-1500 plotter or, in a conventional case, a storage oscilloscope. You can also solve control and regulation tasks with the MC-12.

The MC-12 is equipped with the CMOS (Computer Measurement Operating System) operating system from RVS Datentechnik so that you can easily use its universal capabilities.

The CMOS operating system is embedded in the BASIC interpreter of the SHARP PC-1500, i.e. all operations can be performed using BASIC commands.

This ensures that the MC-12 system can be programmed for a special measured value acquisition, control or regulation task in a short time.

The CMOS operating system contains dialog-oriented standard programs for operating the MC-12 as a multimeter and transient recorder.

This manual deals first with the hardware of the MC-12, then the programs **MULTIMETER** and **TRANSREC** (transient recorder) and finally the CMOS BASIC commands. The operation of the PC-1500 in general and the PC-1500 BASIC are described in the SHARP manual for the PC-1500.

Chapter 1

SYSTEM DATA

In this chapter you will find the connection values of the inputs and outputs, accuracy specifications and performance data of the MC-12.

1.1 INPUTS

The MC-12 system has 5 analog inputs, which are numbered 1...5.

The measuring range can be set individually for each input 1 from 4.92 V to 0.0481V in 11 steps. In **AUTORANGE ON** mode, the measuring system always selects the most favorable measuring range.

The input resistance is 1 MOhm and the bandwidth 0-40 kHz. (Attention! When the MC-12 is switched off, the inputs are above 1 KOhm to ground; see also chapter 2).

The following tables show the resolution and accuracy of the MC-12 in the various operating modes.

If the upper limit of the measuring range is exceeded, **ERROR 110** is displayed. In **AUTORANGE** mode, this error message is only displayed for input voltages greater than ±4.922V in bipolar mode or +4.942V in unipolar mode.

System data

Measuring ranges, resolution and accuracy of the MC- 12 basic system

Bipolar – Operation

No.	Measuring range/V	Resolution/V	Error/V
1	4.922E+00	38.5 E-03	±38.5E-03
2	2.461E+00	19.2E-03	±19.2E-03
3	1.231E+00	96.1E-04	±96.1E-04
4	6.153E-01	48.1E-04	±48.1E-04
5	3 .076E-01	24.0E-04	±24.0E-04
6	1. 538E-01	12.0E-04	±12.0E-04
7	7.691E-02	60.1E-05	±60.1E-05
8	3.846E-02	30.0E-05	±30.0E-05
9	1.923E-02	15.0E-05	±15.0E-05
10	9.614E-03	75.1E-06	±15.0E-05
11	4.807E-03	37.6E-06	±15.0E-05

Unipolar – Operation

No.	Measuring range/V	Resolution/V	Error/V
1	4.942E+00	19.3E-03	±19.3E-03
2	2.471E+00	96.5E-04	±96.5E-04
3	1.235E+00	48.3E-04	±48.3E-04
4	6.177E-01	24.1E-04	±24.1E-04
5	3 .089E-01	12.1E-04	±12.1E-04
6	1. 544E-01	60.3E-05	±60.3E-05
7	7.721E-02	30.2E-05	±30.2E-05
8	3.861E-02	15.1E-05	±15.0E-05
9	1.930E-02	75.4E-06	±15.0E-05
10	9.652E-03	37.7E-06	±15.0E-05
11	4.826E-03	18.9E-06	±15.0E-05

Measuring ranges, resolution and accuracy with 11-bit module

Bipolar – Operation

No.	Measuring range/V	Resolution/V	Error/V
1	4.922E+00	4.88E-03	±4.88E-03
2	2.461E+00	2.44E-03	±2.44E-03
3	1.231E+00	1.22E-03	±1.22E-03
4	6.153E-01	6.10E-04	±6.10E-04
5	3 .076E-01	3.05E-04	±3.05E-04
6	1. 538E-01	1.52E-04	±1.52E-04
7…11	as with 8 bit		

Unipolar – Operation

No.	Measuring range/V	Resolution/V	Error/V
1	4.942E+00	2.44E-03	±2.44E-03
2	2.471E+00	1.22E-03	±1.22E-03
3	1.235E+00	6.10E-04	±6.10E-04
4	6.177E-01	3.05E-04	±3.05E-04
5	3.089E-01	1.52E-04	±1.52E-04
6	1.544E-01	7.63E-05	±1.50E-04
7…11	as with 8 bit		

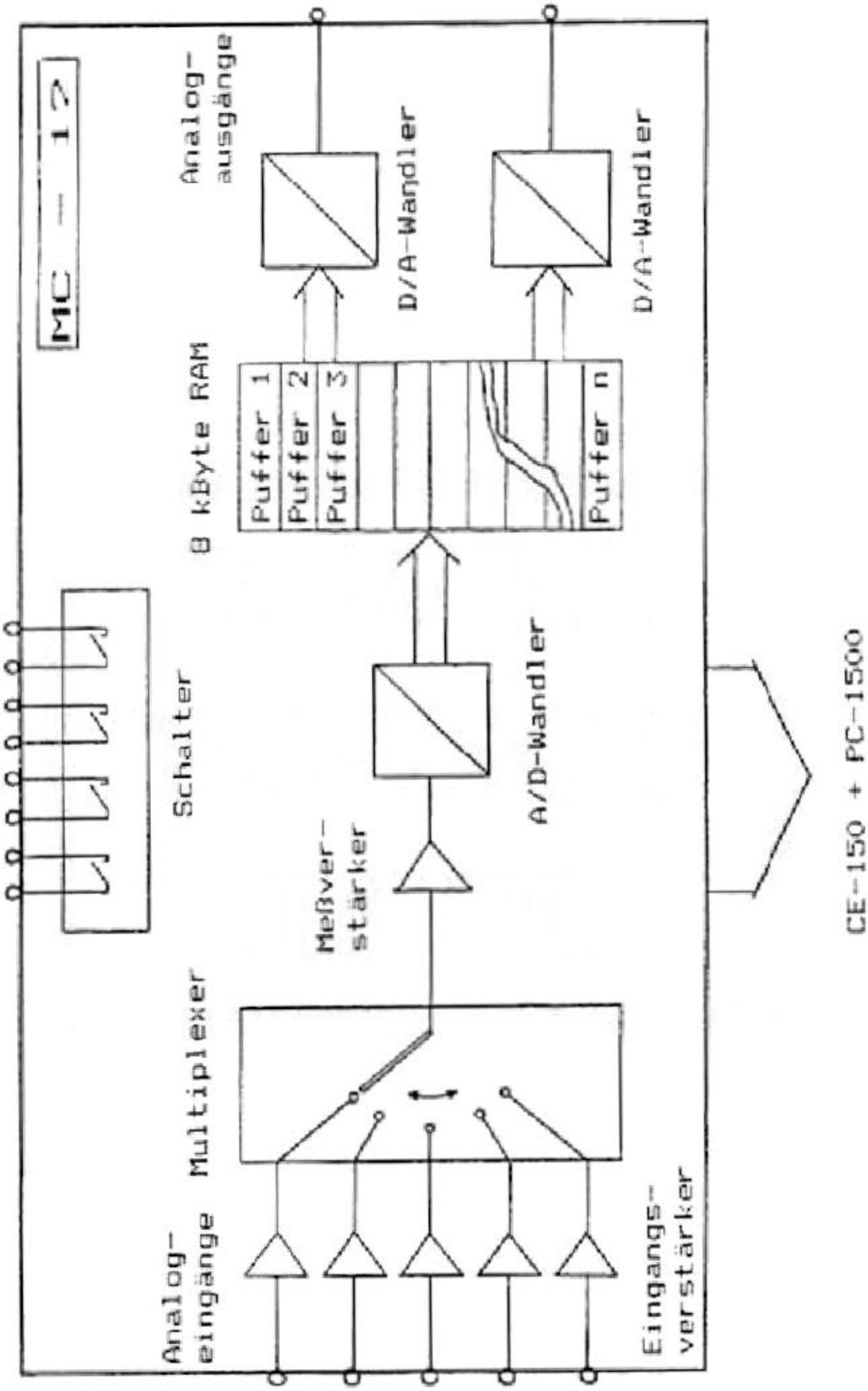

Figure 1-1: Block diagram

1.2 OUTPUTS

The outputs provide an analog voltage in the range from -5.0V to +4.96V in bipolar mode or from 0V to +4 .98V in unipolar mode. These are not power outputs. The output current is limited to 1mA. Monotony is guaranteed for the output. In bipolar mode the smallest voltage step is 39mv, in unipolar mode 19.5mv. In both operating modes 255 steps are possible (8 bit).

Mode	Output voltage range	Resolution	Error (max.)
Bipolar	-5.0 V to +4.961 V	39.0mv	±39.0mv
Unipolar	0.0 V to +4.981 V	19.5mv	±19.5mv

Monotony is guaranteed

1.3 MULTIMETER

In multimeter operation, 256 measurements are carried out in a period of 20ms (corresponding to 1 period at 50 Hz) to form a measured value. The arithmetic mean results in the digitally displayed value. This procedure achieves complete mains hum suppression.

A special command can be used to transform the measured value with any arithmetic operation before it is displayed (see chapter 4).

1.4 TRANSIENT RECORDER

With a maximum sampling frequency of 30 kHz, one-off events can be sampled. Up to 7000 measured values can be recorded and stored. It is possible to record up to 5 input channels with different sensitivities and any history simultaneously. The minimum possible sampling time depends on the desired setting and can be increased to 3.2s per measuring cycle in a 50µ grid.

The output via a simple oscilloscope with cursor control allows simple evaluation of the recorded signals. With the hardcopy command (printout of the oscilloscope image on the plotter) and the plot command (up to 5 signals in one printout), simple and clean documentation is possible (see chapter 5).

Chapter 2

OPERATING INSTRUCTIONS

2 .1 POWER SUPPLY

The MC-12 system is based entirely on CMOS technology and is characterized by very low power consumption. This means that it can be operated independently of the mains for several hours. The maximum operating time is highly dependent on the respective application. The following values can serve as a guide, provided the CE-150 batteries are charged:

- 4.5 hours of uninterrupted measuring operation without the MC-12 being switched off and without printing.
- 6 hours of normal measuring operation, MC-12 is switched off after each measurement and the printer is used to a moderate extent.

Please note the following:

The plot commands, especially for long signal runs, require a lot of power. However, the MC-12 still works at battery voltages at which the printer can no longer be put into operation.

The power supply for the entire measuring system can be provided either by the NiCd battery in the CE-150 or by the mains adapter supplied with the CE-150.

The MC-12 is supplied with a short cable that connects the MC-12 and the CE-150. The options shown in Figures 2-1 and 2-2 are available.

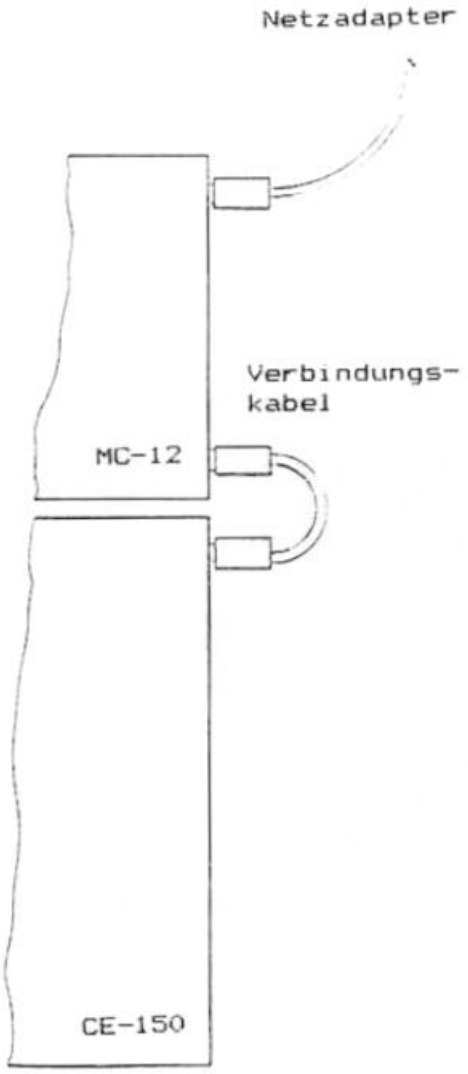

Figure 2-1

Mains adapter connected to MC-12 and connecting cable between MC-12 and CE-150. In this configuration, unlimited operation is possible in any operating mode.

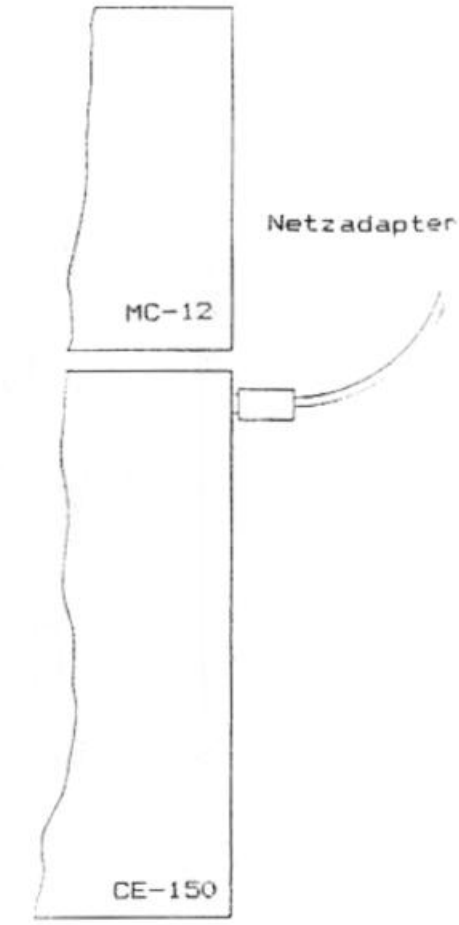

Figure 2-2

Mains adapter connected to MC-12 and connection cable. In this configuration, unlimited operation is possible if the MC-12 is not constantly switched on.

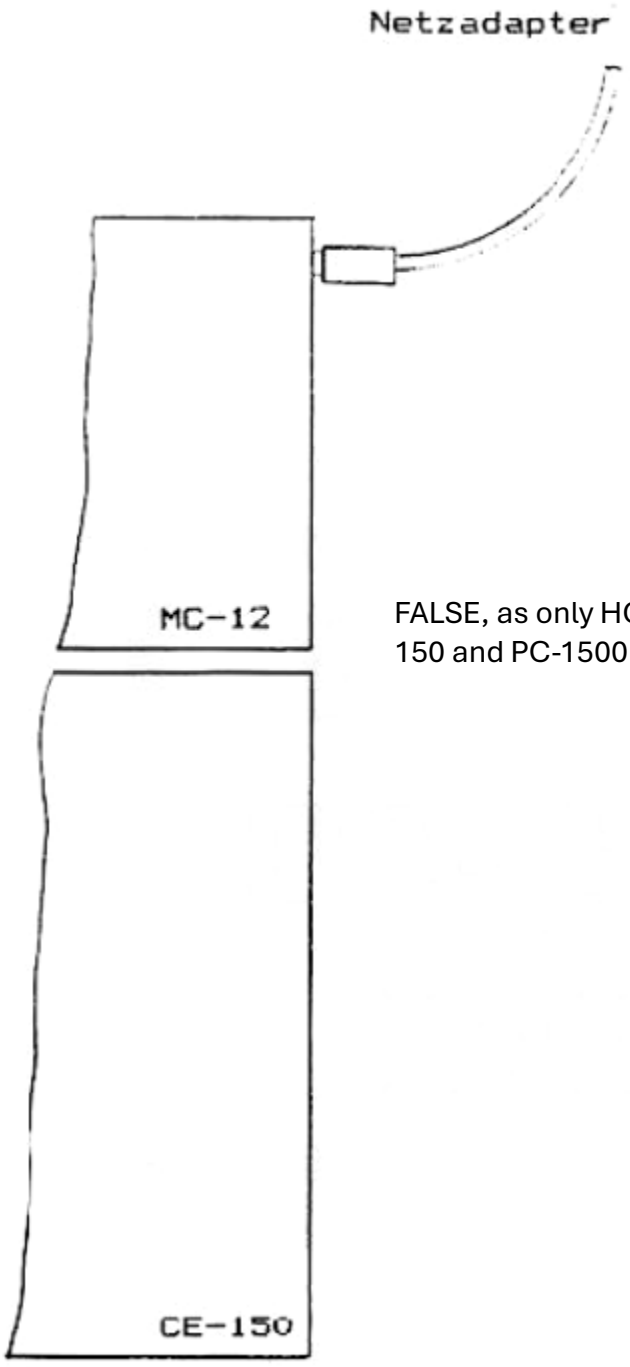

FALSE, as only HC-12 is stored by the mains adapter. CE-150 and PC-1500 work via the battery of the CE-150.

Figure 2-3

If the battery voltage of the CE-150 is no longer sufficient for printing, **ERROR 78** or **ERROR 80** is displayed as soon as a print command is issued. If the battery voltage is also no longer sufficient for the MC-12, **ERROR 135** is displayed as soon as the **MC ON** command has been executed or while the MC-12 is switched on.

If **ERROR 78** or **ERROR 80** occurs and you want to continue working with the mains adapter, the PC-1500(A) computer must be switched off and the mains adapter connected as shown in Fig. 2-1. After approx. 2 minutes, operation can continue, and the mains adapter can be connected as shown in Fig. 2-1. Operation can be continued without waiting.

2-2 OPERATING TEMPERATURE

Operation of the measuring system is guaranteed in the temperature range from +5C to +40C. If the print leads are warmed up or the printer is not required, operation down to 0C is possible. The reduced performance of the batteries must be taken into account.

2-3 CONNECTION OF MEASURING SIGNALS

Under no circumstances should voltages higher than +10V be connected to the input sockets. As the MC-12 system is completely floating, correct earthing must be ensured in individual cases. High static voltages may cause programs to be aborted. Generally, work can be resumed by restarting the programs. Use the plugs supplied by us to connect your measuring signal to the MC-12 system. The sockets have the following pin assignment:

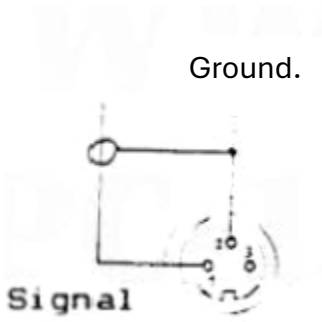

Fig. 2-4: Pin assignment of the input sockets (top view)

Take care when connecting sensitive signals!

As long as the MC-12 is switched off, the inputs are connected to ground via 1KOhm. This must be observed, especially if other measuring devices are connected to a measuring signal. When the MC-12 is switched on, the input resistance is 1MOhm.

2.4 SWITCHES

4 CMOS analog switches and 2 relays are available for controlling processes.

The 4 CMOS switches CAN be activated by the command:
`SWITCH 1..4 ON` or **`SWITCH 1..4 OFF`**.

The signals to be switched must not exceed a voltage of 10V and the switch current must not exceed 80mA. The pin assignment of the sockets can be found in the connection diagram.

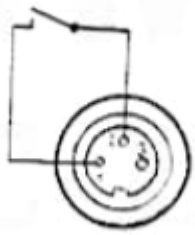

Fig. 2-5 Pin assignment of the visual indicator sockets (top view)

To ensure trouble-free operation, it must be ensured that there is no electrical isolation between the circuit and the MC-12. For this reason, the ground potential of the circuit must be connected to the ground potential of the MC-12.

If signals are to be switched potential-free, the two relays REM0 and REM1 of the PC-1500 are used.

The **`RELAY 0 ON`** or **`RELAY 0 OFF`** and **`RELAY 1 ON`** or **`RELAY 1 OFF`** commands are available for operating the relays. The REM0 control is only effective if the REMOTE switch on the CE-150 is in the ON position.

2.5 SWITCHING BIPOLAR/UNIPOLAR

To enable an even wider range of applications, the MC-12 has the option of operating all inputs and outputs either bipolar (-5V ... +5V) or unipolar (0V ... +5V). This doubles the resolution of voltages in the range of (0V ... +5V).

For technical reasons, the measuring input (A/D converter) must be recalibrated when the operating mode is changed. Please refer to the adjustment instructions in Appendix C.

This change of operating mode should therefore only be carried out in special cases. When the MC-12 is connected to the PC-1500 for the first time and switched on, the bipolar operating mode is set. The MC-12 system is delivered adjusted in bipolar operating mode.

2.6 CONNECTING AN OSCILLOSCOPE

Any two-channel oscilloscope can be used as a peripheral device for the MC-12 to display stored signals.

The two analog outputs of the MC-12 provide the signals for the two channels of the oscilloscope. Connect the two inputs of the oscilloscope to the analog outputs of the MC-12. If you are only using a single-channel oscilloscope, only connect output Y.

Set the oscilloscope setting to “DC”.

The signal amplitude of the image signals is 5V, the image duration is 2.0ms, so that the setting 2V/cm and 2ms/cm makes sense for both oscilloscopes (10cm*10cm screen).

Set the trigger to “**LINE**”. If no image appears for both corresponding commands (see section 11.), increase the trigger level until you get a still image.

Chapter 3

COMMISSIONING

The brief instructions given here for commissioning the PC-1500(A) and the CE-150 are no substitute for studying the separate operating manuals. Only the most important points required for operating the MC-12 system are briefly summarized here.

Commissioning the PC-1500(A)

The PC-1500(A) is commissioned by inserting the batteries supplied. (If the PC-1500(A) is plugged into the CE -150, the batteries in the PC-1500(A) are switched off).

- Insert batteries (Caution, do not use rechargeable NiCd batteries!)
- If a memory expansion module (CE -155, CE-159, CE-161) is to be inserted, open the module compartment on the back of the computer.
- Attention, before you touch the module, you should touch a well-earthed object (wall, tap) to prevent damage to the module due to static charge.
- Insert module (do not touch contacts)
- Switch computer on and clear **NEW0:CHECK** display with <CL>
- **NEW0** <ENTER>
- Switch off the computer

The computer is now ready for use. If problems occur, please use the computer manual and repeat the start-up procedure.

Commissioning

Commissioning the CE-150

First connect the supplied mains adapter to the CE-150 (socket on the bottom right-hand side). The NiCd batteries of the CE-150 require approx. 5 minutes to build up sufficient voltage for operation. To achieve full battery performance, the CE-150 should be charged for at least 15 hours.

Proceed as described in the description of the CE-150.

Commissioning the MC-12

- Switch off the PC-1500(A)
- Remove the plug cover from the back of the CE-150 and store it on the underside of the CE-150.
- Snap the MC-12 mounting plate onto the underside of the CE-150.
- Connect the MC-12 to the CE-150.
- Switch on the PC-1500 (A). The MC-12 is initialized the first time it is switched on. If the MC-12 is not disconnected from the CE-150, the settings and measured values of the last measurement are retained even after the PC-1500(A) is switched off.
- Please also observe the general operating instructions for the correct connection of the mains adapter.

CMOS DIAL0G PR0GRAMS

Chapter 4

MULTIMETER

A program for operating the MC-12 as a multimeter is integrated in the CMOS operating system.

The various functions of this multimeter are triggered by pressing individual buttons, just like a conventional digital multimeter.

In addition to the usual digital display of the measured values, the MC-12 multimeter offers a graphical analog display which shows the minimum and maximum signal levels for variable signals.

The voltage at each of the 5 analog inputs can be measured either in a set range (with analog display) or with automatic range selection by the MC-12 (pure digital display).

If the measuring range is exceeded, "**OVERFLOW**" is displayed

A numerical function for converting the measured values can be assigned to each input channel using the **SETFUNCTION** command (see section 7.3). The values of this function can be displayed by the multimeter.

If the graphical analog display is activated, all measurements are always carried out with a resolution of 8 bits. During an interval of 20ms, 256 individual measurements (i.e. approx. 80µs/individual measurement) are carried out and the average, minimum and maximum values are then displayed.

If an 11-bit module is present, the measurements are carried out with a resolution of 11 bits for purely digital display of the measured values.

Multimeter

The multimeter program is started by entering the command **MULTIMETER** <ENTER>. However, the MC-12 must first be switched on with the command **MC ON** <ENTER>.

Measurement example

- Switch the analog part of the MC-12 using the command: **MCON** <ENTER>
- Specify the input function “4*CHA(3)” on channel 3: **SETFUNCTION 1,3*CHA(1)** <ENTER >
- Start the multimeter with the command **MULTI.** <ENTER>
- The display shows **'CHANNEL 1=0.000V'**.
- Apply a voltage of +2V to channel 3.
- To switch to channel 3, press the button (3)
- **CHANNEL 3=2.01V** appears in the display
- If you press the <P> button, the display is printed out on the CE-150 together with the values of all other channels.
- To display the input function, press the <DEF> button.
- **CHANNEL 3=8.04** appears in the display
- Connect a 2V AC voltage of 50Hz to the channel.
- Press the <1> button.
- Press the <N> button.
- The display shows a bar that ranges from the minimum to the maximum input voltage.
- Press the <E> button. Multimeter operation has ended.

Multimeter

Functions of the multimeter

The multimeter program is called up by the **MULTIMETER** command.

The analog part of the MC-12 must be switched on, otherwise the error message "**ERROR 101**" will be displayed (see chapter 6). If the battery voltage of the system is too low, the error message "**ERROR 135**" is displayed.

In multimeter mode, the display of the PC-1500 constantly shows the current measured value at the respective input channel.

You can trigger the functions described below by pressing the indicated buttons. Please note that the buttons sometimes must be held for a short moment before the desired function is triggered.

Key: <1> ... <5>
Switching the display to inputs 1 ... 5

Key: <A>
Switch on automatic range selection (**AUTORANGE**): In this operating mode, the MC-12 automatically selects the most sensitive measuring range for each measurement. The measured value is only displayed digitally. If the corresponding module is available, measurements are made with a resolution of 11 bits.

KEY: <N>
Switch on normal display: The automatic measuring range selection is switched off; the measurement is carried out in the currently set measuring range. At the same time, the analog display is switched on. If there is no pure DC voltage signal, the display appears in a bar graph ranging from the mean value to the maximum value of the signal during a measuring period (20ms). The measurements are always made with B bit resolution only.

KEY: <H>
Hold minimum and maximum: As <N>, but additionally the absolute minimum and maximum of the input signal since the last time the <H> button was pressed is shown on the analog display.

KEY: <↑> (autorepeat)
Reduce measuring range: The measuring range of the currently
displayed input is halved. This function is only effective if the automatic measuring range selection is switched off (in the operating modes N, H).

KEY: <↓> (autorepeat)
Increase measuring range: The measuring range of the currently displayed input is doubled. This function is only effective if the automatic measuring range selection is switched off.

KEY: <DEF>
Switch the display of the function value on/off: A function for converting the measured values can be assigned to each input channel using the **SETFUNCTION** command (see section 7.3). Instead of the measured value, the current value of this function can be displayed using <DEF>. The display follows the current **USING** format (see PC-1500(A) operating instructions, section 16.10)

KEY: <P>
Print: The measured values of all five input channels are printed out on the CE-150 plotter.

KEY: <E>
Termination of multimeter operation. Return to the calling BASIC program.

KEY: <BREAK>
Abort multimeter operation and the calling BASIC program.

Chapter 5

TRANSIENT RECORDER

The MC-12 operating software includes a program for transient recorder operation of the MC-12.

This program can only be used if no other BASIC program is stored in the working memory of the PC-1500(A). Therefore, save any programs you have stored in the memory on cassette and delete the program memory in PRO mode (press the <MODE> button) by entering the instruction **NEW** <ENTER>. Switch the computer back to RUN mode (by pressing the <MODE> button again) and enter **TRANSREC** <ENTER>.

This command loads the transient recorder program of the MC-12 into the PC-1500(A). If **ERROR 102** is displayed, the program memory of the PC-1500(A) is still occupied by another program.

Measurement example

- Load the program with the command: **TRANS.** <ENTER>
- Apply a sine wave signal with a frequency of 100 Hz and a peak voltage of +- 20mV to channel 1.
- For example, apply a DC voltage of 1V to channel 2.
- Start the transient recorder with **RUN** <ENTER >
- Display: **HOW MANY CHANNELS (1...5)?**
- Input: **2**
- Two channels are sampled

- Display: **HOW MANY BLOCKS**
  - **BUFFER LENGTH <1...13>?**
  - Input: **3** <ENTER>
  - A buffer memory of 3 blocks of 256 values is created for each of the two input channels. This means that 768 pairs of values are recorded during the measurement.

- Display: **SELECT**
  - **TRIGGER CHANNEL (1...5)?**
  - Input: **1**
  - Channel 1 triggers the measuring process and is scanned as the first channel.

- Display: **SELECT**
  - **NEXT CHANNEL (1...5)?**
  - Input: **2**
  - The second channel detected is channel 2.

- Display: **SELECT RANGES!**
  - **DIRECT VIEW WITH**
  - **MULTIMETER (Y/N)?**
  - Input: **N**
  - If "**Y**" is entered, the measuring ranges can be set in multimeter mode using the control display in M or H mode (see chapter 4).
  - Now, however, the ranges are set directly.

- Display: **RANGE OF**
  - **CHANNEL 1 (0...4...38)?**
  - Input: **0.02** <ENTER>
  - The 38mV range is set on channel 1. (This is the most sensitive range, which contains 0.02V).

- Display: **RANGE OF**
  - **CHANNEL 2 (0...4.88)?**
  - Input: **1** <ENTER>
  - The 1.23V range is set on channel 2

- Display: **RANGES OK <Y/N>?**
  - Input: **Y**

- Display: **HOW MANY BLOCKS**
  - **BUFFER LENGTH (1...13)?**
  - Input: **3** <ENTER>
  - A buffer memory of 3 blocks of 256 values is created for each of the two input channels. This means that 768 value pairs are recorded for each measurement.

- Display: SELECT
  - **TRIGGER CHANNEL (1...5)?**
  - Input: **1**
  - Channel 1 triggers the measuring process and is the first channel to be scanned.

- Display: SELECT
  - **NEXT CHANNEL (1...5)?**
  - Input: **2**
  - The second channel detected is channel 2

- Display: **SELECT RANGES!**
  - **DIRECT VIEW WITH**
  - **MULTIMETER (Y/N)?**
  - Input: **N**
  - If "**Y** '' is entered, the measuring ranges can be set in multimeter mode using the level display in M or H mode (see chapter 4). Now, however, the ranges are set directly.

- Display: **RANGE OF**
  - **CHANNEL 1 (0...4.88)?**
  - Input: **0.02** <ENTER>
  - The 38mV range is set on channel 1. (This is the most sensitive range, which contains 0.02v).

- Display: **RANGE OF**
  - **CHANNEL 2 (0...4.88)?**
  - Input: **1** <ENTER>
  - The 1.23V range is set on channel 2.

- Display: **RANGES OK (Y/N)?**
  - Input: **Y**

Transient Recorder

- Display: **HOW MANY BLOCKS**
  - **PREHISTORY (0...2)?**
  - Input: **0** <ENTER >
  - No prehistory (signal curve before the trigger point) is recorded.

- Display: **SELECT SCAN TIME (ms)**
  - **SCAN TIME (0.25...)?**
  - Input: **0.25** <ENTER>
  - The specified minimum scan time (0.25ms) is selected.

- Display: **TRIGGER**
  - **LEVEL (0...0.038)?**
  - Input: **.01** <ENTER>
  - The trigger level (channel :) is set to 0.01V.

- Display: **TRIGGER EDGE (+/-)**
  - Input: **+**
  - Positive edge triggering is selected, i.e., the measurement starts when the 0.01V level on channel 1 is crossed for the first time in the positive direction.

- Display: **PRESS ENTER TO START SCAN**
  - Input: <ENTER>
  - Press <ENTER> when you are ready to take a measurement.

- Display: **SCANNING...** (briefly during the measurement)
  - The MC-12 now waits until the trigger condition is met. Then, every 0.25ms, a pair of values from inputs 1 and 2 is transferred to buffers 1 and 2 until 768 pairs of values have been recorded.

- Display: **SCREEN DISPLAY (Y/N)?**
  - Input: **N**
  - By entering "**Y**" the signal waveform can be viewed on the oscilloscope screen when an oscilloscope is connected. The signal waveform display can be stretched or compressed on the screen, and the screen display can also be copied to the plotter. (See Section 11.1)

- Display: **PLOT (Y/N)?**
  - Input: **Y**
  - The entire recorded signal waveform is displayed on the plotter.

- Display: **NEW SCAN (Y/N)?**
  - Input: **M**
  - If "**Y**" is selected, a new measurement is taken with the same set parameters.

- Display: **NEW PARAMETERS (Y/N)?**
  - Input: **N**
  - This terminates the program. Entering "**Y**" starts the dialog again.

As the example shows, the transient recorder program guides you through all the steps necessary for a measurement in a dialog.

If the program requests input, the possible range of values is always given. If an input error occurs, a short beep sounds and the program repeats the corresponding question.

After starting the program, the following question appears on the display:

HOW MANY CHANNELS (1...5)

whereupon you enter the desired number (1…5) of input channels to be sampled. A buffer is created for each input channel. Therefore, if two channels are to be sampled, the program creates two buffers.

The following question will then appear on the display:

HOW MANY BLOCKS
BUFFER LENGTH <1...nn>

Depending on the channel, you can specify how many values should be captured per channel during the sampling process. A minimum of 256 values is captured, and a maximum of nn such blocks, with nn varying between 28 and 5 depending on the number of channels to be sampled (see Chapter 9.1).

The display will next show:
SELECT
TRIGGER CHANNEL (1...5)

Then enter the number of the input channel that will serve as the trigger input. The measured values from this input are stored in the first buffer.

If more than one channel is to be sampled, the following prompt appears:
SELECT
NEXT CHANNEL (1...5)

whereupon you enter the number of the next input channel to be scanned, which is then stored in the 2nd buffer.

This is repeated until all input channels to be scanned are selected. The following appears on the display:
NOW SELECT RANGES!
DIRECT VIEW WITH
MULTIMETER (Y/N)?

If this question is answered with "Y," the MULTIMETER program (see Chapter 4) is called up. This allows the level of the individual channels to be set using the bar graph on the display.

Otherwise, the measurement ranges of the selected channels will be displayed after the question:
RANGE OF
CHANNEL n (0...4.88)?

by entering the upper range limit (signal level in VSS).

This question is repeated until each selected channel is assigned a measurement range.

Transient Recorder

After all measuring ranges have been determined, the question:
HOW MANY BLOCKS
PREHISTORY (0...nn)?

Specifies how many values from the history, i.e., the signal curve before triggering, are to be recorded. The number of values is specified in blocks of 256 values.

Since the history must always be one block (of 256 measured values) shorter than the entire buffer memory, no history can be recorded with a buffer length of one block. The maximum possible length nn of the history is displayed:
SELECT SCANTIME (ms)
SANTIME (x.xxx...)?

Now you can specify the sampling interval, with the minimum sampling time x.xxx being displayed. Depending on the number of selected channels, their measurement ranges, and the length of the history, this minimum time varies between 0.033 ms and 0.550ms. The maximum possible sampling time is over 3200ms.

Be aware of the questions:
TRIGGER
LEVEL (0...x.xxx)

and

TRIGGER EDGE (+/-)

Specify the desired values for the trigger level and edge trigger type. The trigger level must be within the measurement range of the trigger channel.

By confirming the message:
PRESS ENTER TO START SCAN

Press <ENTER> to initiate the measurement. For verification, the display shows:
SCANNING…

The system now waits (while simultaneously recording the history) until the trigger condition is met. The measured values from the input channels are then read into the buffer memory at the specified time interval.

If the trigger condition is not met (e.g. trigger level is too high), the waiting state of the MC-12 can be aborted using the <BREAK> key.

Then, by answering the questions accordingly:
SCREEN DISPLAY (Y/N)?
PLOT (Y/N)?
NEW SCAN (Y/N)?

The **SCREEN** menu can be called up to display the acquired signals on the oscilloscope (see Section 11.1), a plot of the signal curve can be triggered on the plotter, or the measurement can be repeated. If the question:
NEW PARAMETERS (Y/N)?

If "**N**" is answered, the program terminates, but all stored values are retained.

Otherwise, the program sequence is repeated.

CMOS: BASIC COMMANDS

CMOS BASIC Commands

The following chapters describe the commands implemented in PC-1500 BASIC for operating the MC-12.

These commands can be used to control all operations of the MC-12:

- Turning the MC-12 on/off and initializing it
- Individual measurements
- Control via switches, relays, and D/A converters
- Saving recorded signal waveforms in a buffer (transient measurements)
- Processing the saved signals
- Outputting the saved signals on a plotter or oscilloscope

At the beginning of each of the following chapters you will find a short introduction explaining how the commands work and any special features to be observed.

Examples of how to use the commands are listed at the end of each chapter.

Within the chapters, the individual commands are explained in turn.

You can use the CMOS BASIC commands in your own BASIC programs, or you can enter them directly and have them executed.

However, this assumes some knowledge of BASIC and how to operate the PC-1500. You'll find everything you need in the PC-1500 manual.

CMOS BASIC Commands

The individual CMOS commands are described in this manual according to the following scheme:

Syntax:

The command and the required parameters are listed. The permissible range of values for the parameters is specified.

Example: **SETRANGE** channel number, range limit
Abbreviation: **SETR.**
Channel number: 1 ... 5
Range limit: 0 ... 4.88

This means that when using **SETRANGE**, a valid channel number and a range limit must always be specified.

So:
SET RANGE 1,2.5 is allowed.
SET RANGE 1 is not allowed (missing range limit).
SET RANGE 7,4 is not allowed (channel number too large).

For all numeric parameters, any BASIC expressions can be used instead of simple numbers.

Example:
```
N=1
R=0.5
SETRANGE N,2*R
```

If only whole numbers are important (e.g. channel numbers), the fractional part is simply cut off - as is usual with the PC-1500.

Example: **SET RANGE 2.1,4** is equivalent to **SETRANGE 2,4**

Like all PC-15 00 BASIC commands, the CMOS commands can be abbreviated using a period; the shortest permissible form is given under 'Abbr.: '.

Example: **SETR. 2,4** is equivalent to **SETRANGE 2,4**

Initialization values:

For commands that specify certain system parameters, the initialization values of these parameters are given below, as they are set when the system is first switched on or after the INIT command.

All parameters you have set once remain effective (even after switching the system on/off) until they are changed with corresponding commands.

Error messages:

If incorrect commands are given, the PC-1500 reports this by:

ERROR nnn **IN** mmm (during program execution)

or

ERROR nnn (in direct mode)

where nnn indicates the respective error number and mmm indicates the program line.

The specific error messages of the CMOS commands are given after the description of the commands.

The CMOS error numbers are all in the range 100...139

However, common PC-1500 BASIC error messages such as "**ERROR 1**" (syntax error) are not listed. If such errors occur, you must consult the PC-1500 manual.

Chapter 6

(Re-)initialization Turning the MC-12 ON/OFF

With the commands described in this section, the MC-12 system can be initialized, switched on/off to reduce power consumption, or put into a standby mode.

INIT
Abbreviation: **INI.**

Initializes the measuring system and sets the initial values for all system parameters as specified in the following sections. At the same time, the MC-12 is switched on.

INIT B
INIT U

Abbreviation: **INI. B INI. U**

INIT B puts the MC-12 into bipolar mode, **INIT U** into unipolar mode, otherwise same as **INIT**.

Please note, however, that changing the operating mode requires recalibration of the MC-12 (see Appendix C).

When the MC-12 is first switched on after connecting it, the bipolar operating mode is automatically initialized.

(Re-)initialization, switching on/off the MC-12

MCON
MCOFF

Abbreviation: **MC. MCOF.**

To reduce power consumption, the analog part of the MC-12 can be switched on and off using these BASIC commands.

If a command is given when the analog part is switched off and can only be executed when the analog part is switched on, the error message "**ERROR 101**" is displayed.

If the system's battery voltage is too low when the MC-12 is turned on, the error message "**ERROR 135**" is displayed.

The **MCON** command is delayed by approximately 0.5 seconds, while **MCOFF** takes effect immediately.

Error messages: **ERROR 135** Battery voltage too low

SLEEP sleep_time
Abbreviation: **SL.**
sleep time: 2...65535 (seconds)

This command puts the entire system into a power-saving sleep mode for a specific period of time. The sleep time is specified in seconds.

The PC-1500 remains in sleep mode for the specified time, with the MC-12's analog component turned off. Power consumption in sleep mode is only approximately 5 mA, compared to approximately 20 mA when running a BASIC program with the MC-12 turned off.

The sleep mode can be canceled using the <BREAK> button.

Example: **SLEEP 10**
Error messages: **ERROR 19** Invalid sleep time

Chapter 7

INDIVIDUAL MEASUREMENTS

For individual measurements, the measured values from the analog inputs are transferred directly to a BASIC program or (in manual mode) displayed. Depending on the BASIC program, a maximum of 10 measurements per second can be performed.

The measuring range can be selected independently for each of the five analog inputs. Eleven measuring ranges from -4.88... +4.88V to -4.8...+4.8mV are available (see section 1.1).

In **AUTORANGE** mode, the MC-12 automatically selects the most sensitive measuring range for each individual measurement; the range specifications are temporarily overridden.

For each measurement, the system automatically performs 256 individual measurements within 20 milliseconds, and the average value is calculated. If an overflow occurs, the error message "**ERROR 110**" is displayed.

If the MC-12 is equipped with an 11-bit expansion module, individual measurements in the corresponding measuring ranges (see section 1.1) are carried out with 11-bit accuracy, otherwise with 8-bit.

All measured values or measuring ranges are specified in "volts" within the BASIC commands, the input channels are addressed via channel numbers 1...5.

7.1 COMMANDS FOR PARAMETER SETTING

SETRANGE channel_number, range_limit

Abbreviation: **SETR**.

channel_number: 1...5
range_ limit: 0...4.88 (Volt)

This command sets the measuring range of the individual input channels.

From the 11 possible measuring ranges (see section 1.1), the one with the finest resolution is selected, which contains the specified range limit.

Initialization: 4.88V range on all channels

Example: **SETRANGE 1,2**
sets the 2.45V range on channel 1.

Error messages: **ERROR 19** Invalid channel number
ERROR 110 Invalid range limit

RANGE (channel number)

Abbreviation: **RANG.**

Channel number: 1...5

Example: **RANGE(1)**
Error messages: **ERROR 19** Invalid channel number

AUTORANGE ON
AUTORANGE OFF

Abbreviation**: AU.O. AU.OF.**

These commands switch the automatic measuring range selection on/off.

If this is enabled, the measuring range specified by **RANGE** is ignored for individual measurements and the measuring range is automatically determined for each measurement by refining the range step by step.

For small input voltages, the measurement process therefore takes significantly longer when measuring with automatic range selection.

After switching off the automatic range selection, the previously set range limit becomes active again.

Initialization: **AUTORANGE ON**

7.2 MEASUREMENT COMMANDS

CHA (channel_number)

Abbr.: **CH.**

Channel number: 1...5

This function returns the current measured value at the input channel specified by the channel number.

With **AUTORANGE OFF** the measurement is carried out in the set measuring range. With **AUTORANGE ON** the most sensitive measuring range is automatically selected.

The **CHA()** function is used like any other BASIC function within numeric expressions.

Example:	**A=CHA (1)**	
Error messages:	**ERROR 19**	Invalid channel number
	ERROR 110	Input voltage outside the measuring range
	ERROR 101	MC-12 is turned off
	ERROR 135	Battery voltage too low

INCHA channel_number, variable_name

Abbr.: **INC.**

Channel number: 1...5
Variable name: numeric BASIC variables such as A, B1, XX(2)

This command assigns the corresponding input value to the specified numeric variable. Except for the different syntax, this command behaves exactly like **CHA()**.

Example: **INCHA 1,B**

Error messages: As with **CHA()**

7.3 FUNCTIONS

Each of the input channels can be assigned a fixed numerical function for converting the measured values.

This simplifies the scaling of the measured values, characteristic curve linearization and unit conversion.

The values of the respective function can be displayed in the **MULTIMETER** (see Chapter 4).

SETFUNCTION channel_number, function

Abbreviation: **SETF.**

Channel number: 1...5

Function: numeric expression (must not take up more than 40 bytes of storage space)

The specified channel is assigned to the respective function, generally a numeric expression with **CHA(I)** as an argument.

The function expression is calculated internally immediately in order to generate any error messages during the function definition.

The respective function is evaluated in subsequent **INFUNCTION** commands or in the **MULTIMETER** program.

Initialization:	**CHA (**channel_number**)**	on all channels
Example:	**SETFUNCTION 1,3*CHA(1)+5**	
Error messages:	**ERROR 119**	Function expression too long otherwise e.g. error messages from **CHA()**

INFUNCTION channel_number, variable_name

Abbreviation: **INF.**

Channel number: 1...5
Variable name: numeric BASIC variables such as A, XY, ...

The specified variable is assigned the current value of the function defined with the **SETFUNCTION** command.

Example: **INFUNCTION 1,C**

Error messages: depending on function

7.4 EXAMPLES OF INDIVIDUAL MEASUREMENTS

Apply a voltage of 2V to input 1 and enter the following command:

Input	Display	Notes
MCON	**>**	Turning on the MC-12
SETRANGE 1,2	**>**	Measuring range 2V
RANGE(1)	**2.45**	Measuring range limit
AUTORANGE OFF	**>**	Auto range selection switched off
CHA(1)	**2**	Current measured value on channel 1
A=3*CHA(1)	**6**	
A	**6**	
INCHA 1,B	**>**	The current input value is assigned to variable B.
B	**6**	
SETF .1,2*CHA(1)+15	**>**	Define a function for subsequent **INFUNCTION** command.
INFUNCTION 1,C	**19**	Transform the current measured value using the defined function.
C	**19**	

Example program: Simple logger

The following program logs the voltage at input 1 on the printer every full minute.

To enter the program, switch the PC-1500 to PRO mode. After entering the program, you can run the program in RUN mode using the command. The program is aborted with <BREAK>.

Individual measurements

After the first minute, every minute is logged:

1. MIN: 2.01V
2. MIN: 2.01V
:
:

For information on BASIC commands and the **TIME** function, refer to the PC-15 00 operating instructions.

Program:	Note:
10 I=1 **20 MCON:AUTORANGE ON** **30 T=TIME** **40 IF INT(T*100)/100<>T GOTO 30** **50 LPRINT I;" . MIN: ";CHA(1);"V"** **60 SLEEP 57** **70 I=I+1:GOTO 30**	 Time Wait for full minutes Print Delay (Sleep)

Example program: Minimum, Maximum, Average

The program calculates average, minimum and maximum values for over 100 measurements on channel 1.

To enter the program, switch the PC-1500 to PRO mode. After entering the program, you can start the program in RUN mode using the RUN command.

After starting and 100 measurements, minimum, average and maximum values are printed on the printer

MIN: WITH: MAX :
2.01 2.45 2.61

Individual measurements

Program:	Note:
10 MI=10:MA=-10:MW=0 **20 MCON** **30 FOR I=1 TO 100** **40 A=CHA(1)** **50 IF A<MI LET MI=A** **60 IF A>MA LET MA=A** **70 MW=MW+A** **80 NEXT I** **90 MCOFF** **100 LPRINT " MIN: MIT: MAX:"** **110 USING "##.##"** **120 LPRINT MI;MW/100;MA** **130 END**	initialization minimum Maximum Mean formatting

Chapter 8

CONTROL

The 4 analog switches and 2 D/A converters of the MC-12 system as well as the two remote relays of the CE-150 can be used for control.

However, the following restrictions must be observed:

If the analog section of the MC-12 is switched off, the D/A converters and the analog switches are inoperative. The last specified status is only restored when the MC-12 is switched on again.

Attention: The MC-12 is also switched off during the **PLOT** or **HARDCOPY** command (see chapter 11).

The D/A converters are also used to display signals on the oscilloscope, but they cannot be used for control purposes at the same time.

SWITCH switch_number **ON**
SWITCH switch_number **OFF**

Abbreviation: **SW.**

Switch number: 1...4

Switches the specified analog switches on/off. Ineffective during **MCOFF** or **PLOT**.

Initialization:	All switches off	
Example:	**SWITCH 1 ON**	
Error messages:	**ERROR 19**	Illegal switch number
	ERROR 101	MC-12 switched off
	ERROR 135	Battery voltage too low

RELAY relay_number **ON**
RELAY relay_number **OFF**

Abbreviation: **REL.**

Relay number: 0 or 1

Switches the remote relay '**REM0**' or '**REM1**' on the CE-150 on/off. Actuation of Relay 0 is only effective if the 'REMOTE' switch on the CE-150 is in the 'ON' position.

Initialization: Both relays off

Example: **RELAY 0 ON**

Error messages: **ERROR 19** Invalid relay number

OUTCHA output_number, voltage

Abbreviation: **OU.**

Output number: 1 or 2
Voltage: 5 ... +4.96 (Volt, bipolar operation)
0 ... +4.98 (Volt, unipolar operation)

Applies the specified voltage to the respective analog output. Ineffective during **MCOFF**, **PLOT** or oscilloscope operation.

Initialization: 0V at both outputs

Example: **OUTCHA 1,2.5**

Error messages: **ERROR 19** Illegal output number
ERROR 110 Illegal voltage
ERROR 101 MC-12 switched off
ERROR 135 Battery voltage too low

Chapter 9

MEASUREMENT OF TRANSIENTS

To record fast processes (transients) with a maximum of 30,000 measurements per second, the measured values are automatically read into the buffer memory at a preset time interval and only then evaluated.

For this purpose, you can create a fixed number of buffer memories in the MC-12, the program memory of the PC-1500 remains unaffected.

The size of the buffer memory can be freely selected in blocks of 256 values each and ranges from 1*256 to 28 *256 (=7168) values.

The reading of the measured values from the analog inputs into the buffers is controlled by special commands with which a trigger level for the start of the reading, the sampling interval, the number of channels to be sampled and the length of the history to be recorded are defined.

The measuring range set at the inputs with **SETRANGE** is also taken into account for transient measurements, only the automatic range selection as for individual measurements is no longer possible.

Transient measurements are always carried out with 8 Bit resolution.

The maximum achievable sampling rate for transient measurements depends on the number of channels to be sampled, the different measuring ranges and the length of the history to be recorded.

9.1 COMMANDS FOR BUFFER MANAGEMENT

Up to 26 buffer memories can be created in the MC-12 to store signal sequences.

When measuring transients, the measured values are stored as 8 bi t numbers in the buffers. At the same time, the set measuring range and the respective sampling parameters are also stored in the buffers.

Each buffer can store exactly one input signal. The acquired signal duration is the product of the selected sampling interval and the buffer length.

To ensure that 11-bit values can also be stored in the buffers with full accuracy if an 11-bit expansion module is available, it is possible to create double-precision buffer memories. The storage of signals using bit resolution can, however only by means of individual measurements and **BUFWRITE** (see section 10.3), not automatic transient measurements.

BUFINIT number_of_buffers
BUFINIT number_of_buffers, buffer_size

Abbreviation: **BUFI.**

number_of_buffers: 1...26
buffer_size: 1...28 (blocks of 256 8-bit values)

This command is used to create the desired number of buffers. The buffers are deleted at the same time.

If no buffer size is specified, the buffers are given the maximum possible size as listed in the table below.

Otherwise, the buffer size can be specified in blocks of 256 values.

Possible buffer sizes for 8-bit buffers

Number	Length (blocks)	Length (values)
1	1 ... 28	256 ... 7168
2	1 ... 13	256 ... 3328
3	1 ... 8	256 ... 2048
4	1 ... 6	256 ... 1536
5	1 ... 5	256 ... 1280
6	1 ... 4	256 ... 1024
7 ... 9	1 ... 3	256 ... 768
10 ... 13	1 or 2	256 or 512
14 ... 26	1	256

Initialization: 5 buffers of 5 blocks (1280 values)

Example: **BUFINIT 3.2** (3 buffers, 512 values)

Error messages: **ERROR 19** Invalid number of buffers
ERROR 121 Invalid buffer size

DBUFINIT number_of_buffers
DBUFINIT number_of_buffers, buffer_size

Abbreviation: **BUFI.**

number of buffers: 1 ... 13
Buffer size: 1 ... 14 (blocks of 256 16-bit values)

This command makes it possible to create double-precision buffer memories that can hold 16-bit values. This is not used for transient measurements, as these are always carried out with 8-bit resolution. For writing to the buffer memory by BASIC programs (see section 10.3), however, this possibility is very useful in connection with 11-bit direct measurements.

This command is completely analogous to **BUFINIT**, the maximum buffer size also depends on the number of buffers selected, as can be seen in the following table:

Possible buffer sizes for 16-bit buffers

Number		Length (blocks)	Length (values)
1		1 ...14	256 ... 3584
2		1 ... 6	256 ... 1536
3		1 ... 4	256 ... 1024
4		1 ... 3	256 ... 768
5		1 ... 2	256 ... 512
6		1 ... 2	256 ... 512
7 ... 13		1	256

Example: **DBUFINIT 2.2** (2 16-bit buffers per 512 values)

Initialization: basically 8-bit buffer, see **BUFINIT**

Error messages: **ERROR 19** Invalid number of buffers
ERROR 121 Invalid buffer size

BUFNUM
BUFLEN

Abbreviation: **BUFN. BUFL.**

These control variables contain the number and length (number of values) of the buffer memory.

Examples: **D=BUFNUM**
E=BUFLEN (number of values)
F=BUFLEN/256 (number of blocks)

9.2 COMMANDS FOR SETTING THE SCANNING PARAMETERS

SETPREHIST prehistory_blocks

Abbreviation: **SETP.**
prehistory_blocks: 0 ... buffer size-1 (blocks)

This command is used to specify how many blocks of 256 values are to be used in each buffer to store the previous history, i.e. the signal curve before the trigger condition occurs.

However, the maximum sampling rates can only be achieved with a pre-shift length of 0 or 1 blocks.

Initialization: 0 Blocks

Example: **SETPREHIST 1** (256 values history)

Error messages: **ERROR 19** Illegal number of blocks

PREHIST

Abbreviation: **PRE.**

This control variable contains the number of selected history blocks.

Example: **D=256*PREHIST** (number of values for previous events)
E=2.56*PREHIST/BUFLEN (history in % of the total signal detected)

SETTRIGGER level

Abbreviation: **SETT.**

level: -4.92...4.88 (Volt, bipolar operation)
0...4.92 (Volt, unipolar operation)

This specifies a trigger level that triggers the start of automatic reading of the measured values after the INSCAN command (see below).

Whether the trigger level is within the measuring range of the trigger channel is only checked with the INSCAN command.

Initialization: Trigger level 0V

Example: **SETTRIGGER 0.5**

TRIGGER

Abbreviation: **TRI.**

This control variable contains the currently set trigger level.

Example: **G=TRIGGER**

SETSCANTIME sampling_interval

Abbreviation: **SETS.**

sampling interval: 0 ... 3.27 (seconds)

This command is used to specify the length of the sampling interval for the automatic reading of the measured values in.

The maximum achievable sampling rate depends on the number of inputs to be sampled, their measuring ranges and the length of the previous history.

When **SETSCANTIME 0** is entered, the shortest scanning interval possible with the currently set parameters is selected.

If the value of the scanning interval is too low, the error message "**ERROR 111**" is only issued when the **INSCAN** command is executed.

The sampling time can be specified in 50µs increments, the minimum value can be found in the following list:

Condition	Minimum scanning time
1 channel History: 0…1 blocks	33us
1 channel History: Any	50us
k Channels (V=2…5) History: 0…1 blocks all channels same measuring range	K * 50us
k Channels (V=2…5) History: Any Different measuring ranges	50 + k * 100us

Initialization: Sampling interval 0.001s

Example: **SETSCANTIME 50E-6**

SCANTIME

Abbreviation: **SCANT.**

This control variable contains the set sampling time.

Example: **L= SCANTIME*BUFLEN** (total signal duration)

SELECT +channel number, buffer number
SELECT -channel number, buffer number
SELECT +channel number 1, buffer number 1;channel number 2, buffer number 2
SELECT -channel number 1, buffer number 1;channel number 2, buffer number 2

Abbreviation: **SE.**

channel number: 1 ... 5
buffer number: 1 ... Number of buffers

Selects the specified input channels for subsequent transient measurements and assigns buffer memories to them.

The first channel specified in the **SELECT** command is selected as the trigger channel, whereby negative edge triggering is set with the negative sign and positive edge triggering with the positive sign.

Initialization: **SELECT +1,1**

Example: **SELECT -1,1;2,2**

Error messages:		
	ERROR 19	Invalid channel or buffer no.
	ERROR 130	Too many channels selected
	ERROR 131	Buffer memory selected twice

9.3 MEASUREMENT COMMAND

INSCAN

Abbreviation: **INS.**

This command triggers a transient measurement:

After checking the set parameters, the system waits until the specified trigger condition is met. The system waits until the trigger level is crossed for the first time in the specified direction (+/-).

The measured values are then read from the selected inputs into the associated buffer memory at the specified intervals until the buffer memory is full.

While the system is waiting for triggering, the previous history is recorded. If the trigger occurs too early, the prehistory is shortened accordingly, i.e. fewer prehistory values than specified are recorded.

Once the measurement is complete, a zero-point drift correction is carried out using the stored values.

Pressing the <BREAK> button once aborts the measuring process, whereby the BASIC program is only aborted when the <BREAK> button is pressed a second time.

Error messages:	**ERROR 110**	Trigger level outside the measuring range of the trigger channel
	ERROR 111	Specified sampling time too low
	ERROR 101	MC-12 switched off
	ERROR 135	Battery voltage too low

9.4 EXAMPLES FOR TRANSIENT MEASUREMENTS

Input	Display	Notes
MCON	>	Switching on the measuring system
SETRANGE 1,2.4	>	Range limit for channel 1
BUFINIT 5,4	>	5 buffer storage with 4 blocks
BUFLEN	**1024**	Buffer length is 1024 measured values
SELECT +1,1	>	Channel 1 as trigger channel Store signal in buffer 1
SETPREHIST 1	>	Prehistory 1 Block
SETTRIGGER 0.3	>	Trigger level 0.3V
SETSCANTIME 50E-6	>	Sampling interval 50us
INSCAN	>	Start the measurement Standby symbol " >" appears after the trigger condition is met and end the measurement
SELECT +1,2	>	Next signal in buffer 2
INSCAN		Next measurement

Measurements of Transients

Example program: Recording 10 signals on channel 1

Switch the PC-1500 to PRO mode and enter the program below.

After starting this program in RUN mode, 10 transients are recorded on channel 1 with the sampling parameters set in the program.

Program:	Notes:
10 WAIT 32:BUFINIT 10,2 **20 SETRANGE 1,0.5** **30 SETSCANTIME 50E-6** **40 SETTRIGGER 0.1** **50 SETPREHIST 1** **60 MCON** **80 FOR I=1 TO 10** **90 PRINT "MEASURMENT";I** **100 SELECT +1,I** **110 INSCAN** **120 BEEP 1** **130 NEXT 1** **140 MCOFF**	10 buffer memory with 512 values Signal level 0.5 VSS Sampling interval 50µs Trigger level 0.1V History 256 values Channel 1 -> Buffer I Measurement Beep

Chapter 10

ACCESS TO THE BUFFER MEMORY

The measured values stored in the buffers can be easily read by a BASIC program.

In the same way, values can be written to the buffer memory by a BASIC program for later output on the oscilloscope or plotter.

Please note that the numerical values in the buffers are saved in the same format as the measured values.

The value range (analogous to the measuring range) must therefore be specified before values are written to the buffers. If this range is exceeded, an error message is issued.

The values are normally saved with a resolution of 8 bits, unless double-precision buffers are used.

Therefore, the values that are written to the buffers by a BASIC program should exhaust this value range as far as possible (just as measurements should be controlled as well as possible).

If this is not observed, it can happen, for example, that all values written to the buffers within the 8-bit resolution result in NULL.

10.1 READING FROM THE BUFFER MEMORIES

BUFREAD buffer_number, position, variable_name

buffer_number: 1 ... number of buffers
position: 1 ... Buffer length
variable_name: Any BASIC variable such as A, XY, B(2)

The measured value stored in the respective buffer at the specified position is assigned to the specified variable.

Example: **BUFREAD 1,100,A**

Error messages: **ERROR 19** Invalid buffer number
ERROR 121 Non-existent position

10.2 WRITING TO THE BUFFER MEMORY

BUFOPEN buffer_number
BUFOPEN buffer_number, range_limit

Abbreviation: **BUFO.**

buffer_number: 1 ... number of buffers
range_limit: 0 ... 4.88

Deletes the specified buffer memory and prepares it for writing values.

As with **SETRANGE** (see section 7.1), a value range is specified for the values to be saved. This value range corresponds exactly to one of the 11 possible measuring ranges of the MC-12.

If no range limit is specified, the buffer receives the coarsest range (4.88V).

With **BUFOPEN**, the currently set **SCANTIME** and **PREHIST** parameters are simultaneously transferred to the buffers. However, this only affects the subsequent graphical display on the plotter or oscilloscope.

Example: **BUFOPEN 5,2.4**

Error messages: **ERROR 19** Invalid buffer number
ERROR 110 Invalid range limit

BUFRANGE (buffer_number)

Abbreviation: **BUFRA.**

buffer number: 1 ... number of buffers

As a check, this function supplies the range of values stored in the buffer in the same way as **RANGE().**

Example: **BUFRANGE(1)**

Error messages: **ERROR 19** Invalid buffer number

Access to the buffer memory

BUFWRITE buffer_number, position, value

Abbreviation: **BUFW.**

buffer number: 1...number of buffers
position: 1...buffer length
value: -4.92...+4.88 (within the **BUFRANGE**)

Writes the specified world value to the respective buffer memory at the specified position

The values must lie within the specified value range of the buffer (**BUFRANGE**).

Example: **BUFWRITE 1,155,2.2**

Error messages:

ERROR 19	Illegal buffer number
ERROR 121	Illegal position
ERROR 109	Value outside the permissible range

10.3 TRANSFORMING THE BUFFER MEMORY

Even without a BASIC program that accesses the buffer memory with **BUFREAD** and **BUFWRITE**, the stored signals can be transformed.

To do this, simply specify the desired transformation function in the **LOADBUFFER** command.

It must also be ensured that the value range of the function lies within the value range of the buffer (**BUFRANGE**), as specified by **BUFOPEN** (see section 10.3) or during a measurement.

LOADBUFFER buffer_number, function

Abbreviation: **LOA.**

buffer number: 1 ... Number of buffers
function: any numeric expression with argument **BUFFER(), POSITION**

The specified buffer memory is loaded with the values of the specified function. Arguments in the function expression are:

BUFFER (buffer_number)
POSITION

Abbreviation: **BUFF. POS.**

During the **LOADBUFFER** command, **BUFFER(I)** runs through all values stored in Buffer I in sequence and **POSITION** runs through all position values from 1 to **BUFLEN**.

With **LOADBUFFER** it must be strictly ensured that the calculated function values lie within the value range of the buffer.

At the same time, the values should exhaust this range as they are normally displayed as 8-bit values. Otherwise, it can happen that the values within the 8-bit resolution all result in 0.

Access to the buffer memory

The function values are calculated within the **BUFLOAD** command using the normal BASIC functions. As, for example, 1024 values have to be calculated with a buffer length of 4 blocks, the execution time of the **BUFLOAD** command can increase considerably depending on the function used.

BUFLOAD can be canceled with the <BREAK> button.

After **BUFLOAD** is aborted by <BREAK> or an error, **POSITION** contains the buffer position currently being processed, **BUFFER()** returns the values of the buffers at this position.

Error messages:

ERROR 19	Illegal buffer number
ERROR 109	Value outside the permissible range

Examples:

LOAD BUFFER 1,0
Buffer 1 is deleted

LOADBUFFER 1,BUFFER(2)
Buffer 2 is copied to buffer 1

LOADBUFFER 1,ABS(BUFFER(1))
Amount calculation (detector)

```
A=BUFRANGE(3)/(BUFRANGE(1)+BUFRANGE(2))
LOADBUFFER 3,A*E (BUFFER(1)+BUFFER(2))
```
the sum of buffer 1 and buffer 2 is stored in buffer 3

```
A=BUFRANG(1)
B=2*PI/BUFLEN
RADIAN
LOADBUFFER 1, A*SIN(B*POSITION)
```
Buffer 1 is loaded with a sine period

10.4 EXAMPLES OF ACCESS TO BUFFER

Example program: Printing the values of a buffer

The following program prints the values stored in buffer 1 on the printer:

```
10 LPRINT " BUFFER 1:"
20 LPRINT " POS:";TAB7;" VALUE:"
30 FOR I=1 TO BUFLEN
40 BUFREAD 1,1,A
50 LPRINT I;TAB 7;A
60 NEXT I
```

Example program: Simple logger

The following program saves the current measured value at channel 1 in buffer 1 every full minute (see section 7.4)

If the measurement is made with 11 bits, **BUFINIT** can be written in line 10 instead of **DBUFINIT**.

Program:	Note:
10 BUFINIT 1 **20 SETRANGE 1,4.8** **30 BUFOPEN 1,4.8** **40 AUTORANGE OFF** **50 FOR I=1 TO BUFLEN** **60 T=TIME** **70 IF INT(T*100)/100<>T GOTO 60** **80 BUFWRITE 1,I,CHA(1)** **90 SLEEP 58** **100 NEXT I** **110 MCOFF**	same area for input and buffer Wait for full minutes Save measured value Delay (idle state)

Example program: Integral function

The following program first fills Buffer 1 with a sine period, then the integral function is calculated and stored in buffer 2.

Finally, both buffers are displayed on the plotter.

Program:	Notes:
10 BUFINIT 2.1 **20 A=4:RADIAN** **30 B=2*PI/BUFLEN** **40 LOADBUFFER 1,A*SIN(B*POSITION)** **50 BUFOPEN 2** **60 DX=2*PI/256** **70 S=-4** **80 FOR I=1 TO BUFLEN** **90 BUFREAD 1,1,F** **100 S=S+F*DX** **110 NEXT 1** **120 PLOT 1,256,1;1,2**	2 buffers with 256 values Sine -> Buffer 1 Delta X Initial condition Integration of Plotting of both buffers (see section 11.3)

Chapter 11

GRAPHICAL REPRESENTATION OF THE MEASURED VALUES

The signal curves stored in the buffers can be displayed graphically on an oscilloscope connected to the MC-12 or the CE-150 plotter.

11.1 DISPLAY ON THE OSCILLOSCOPE

Any oscilloscope can be used as a peripheral device for the MC-12.

The oscilloscope is connected to the analog outputs of the MC-12 as described in section 2.6.

With a dual-channel oscilloscope, two signal curves stored in the buffers can be displayed simultaneously on the oscilloscope screen. The resolution is 256*2 56 points per signal.

Since the two analog outputs of the MC-12 generate the oscilloscope image, they can no longer be used for control purposes during oscilloscope operation.

Graphical representation of the measured values

OUTSCREEN channel_number, buffer_number, position, number_of_blocks

Abbreviation: **OUTS**.

channel_number: 1 or 2
buffer_number: 1 ... number of buffers
position: 1 ... buffer length
number_of_blocks: 1 ... buffer length/256

This command displays the signal stored in the specified buffer on the oscilloscope.

The beam number indicates the analog output of the MC-12 at which the image signal appears.

The number of measured values specified (in blocks) is displayed from the respective position.

If the number of blocks is N>1, the values are displayed in compressed form by only displaying every Nth value.

The number of blocks can also be selected as 1/2, 1/4, 1/8, 1/16. In this case, the values are stretched, and the intermediate values are interpolated.

Example: **OUTSCREEN 2,1,256,1**

Error messages:
ERROR 19 Illegal beam or buffer no.
ERROR 101 MC-12 switched off
ERROR 121 Illegal position
ERROR 135 Battery voltage too low

SCREEN ON
SCREEN OFF

Abbreviation: **SCR. O. SCR. OF.**

These commands are used to switch the signal display on the oscilloscope on or off.

When the image is switched on, the operating speed of the PC-1500 is only about half of the normal operating speed.

Graphical representation of the measured values

Initialization: Screen switched off

Error messages:

ERROR 101	MC-12 switched off
ERROR 135	Battery voltage too low

SCREEN

Abbreviation: **SCR.**

Takes you to the CMOS screen menu, in which the signals stored in the buffers can be examined:

A pulsating point of light appears on the oscilloscope head screen, which acts as a cursor.

The PC-1500 display shows the number of the respective buffer memory, the exact voltage value at the cursor position and the time from the trigger point to the cursor position. and the time from the trigger point to the cursor position.

The cursor can be moved by pressing individual buttons on the oscilloscope screen. For longer signals, the screen is moved along the signal as a viewing window (scrolling).

The image can be stretched or compressed. When stretching, the image is automatically interpolated so that the waveform of the signal becomes more visible.

A copy of the screen image can be made on the plotter at the touch of a button.

Graphical representation of the measured values

The following button commands can be issued in this operating mode:

Button:	Function:
<→>	Moves the cursor to the right; if the cursor reaches the edge position, the viewing window is moved to the right (scrolling).
<←>	Moves the cursor to the left.
<◆>	Changes the beam on which the cursor is flashing.
<SHIFT>	Switches the synchronous operation of both beams on/off. In synchronous mode, all operations for both beams are carried out simultaneously.
<↑>	Brings the next buffer memory to the display.
<↓>	Displays the previous buffer memory.
<*>	Stretches the display (interpolation)
</>	Compresses the display.
<N>	Normal display (1:1)
<+>	Increases the cursor step size (3 levels)
<->	Reduces the cursor step size (3 levels)
<H>	Hardcopy of the curve under the cursor on the CE-150 plotter. In SHIFT mode, both curves are drawn.
<E>	End, return to BASIC
<BREAK>	Abort

11.2 DISPLAY ON THE CE-150 PLOTTER

When displaying the stored signals on the plotter, the curves are provided with a labeled coordinate system.

The label of the Y-axis is selected based on the stored measuring range (**BUFRANGE**). The label of the time axis is calculated from the stored history and sampling time. Up to 5 curves can be drawn in one image.

PLOT startpos, endpos, compression;bufferno
PLOT startpos, endpos, compression;bufferno, bufferno, ...

Abbreviation: **PL.**

startpos(ition): 1 ... buffer length
endpos(ition): startpos ... buffer length
compression (factor): 0 ... buffer length/256
buffer no: 1 ... buffer count

Graphically displays the signal curve stored in the specified buffers between the start position and end position on the CE-150 plotter.

Multiple buffers are drawn in different colors in the same coordinate system. A maximum of five buffers can be combined in one representation.

If multiple buffers are drawn in an image, they must have the same time axis (same **SCANTIME** and **PREHIST**).

With a compression factor of 1, the image is displayed 1:1, with each pixel corresponding to one measured value.

Analogous to **OUTSCREEN**, the image can be compressed (compression_factor 2, 3, ...) or stretched (compression_factor 1/2, 1/4, 1/8, 1/16).

Graphical representation of the measured values

The maximum image length is 768 pixels. If the entered range exceeds this maximum length, the excess values are not drawn. Large buffers whose representation should be output 1:1 must therefore be drawn in multiple sections.

Example: **PLOT 1,512,1;1,2**

Error messages:	**ERROR 121**	Invalid position specification
	ERROR 19	Invalid buffer number
	ERROR 123	Buffer with different time axis

APPENDIX

Appendix A

LIST OF ERROR MESSAGES

19.	The value of the numeric expression is outside the allowed range. Example: **CHA 6**
101.	To execute the instruction, the analog part of the MC-12 must be switched on with the **MCON** command. Example: **MCOFF** **CHA 1**
102.	An attempt was made to load the program for transient recorder operation even though a BASIC program is present in the PC-1500's memory. Delete the BASIC program with **NEW.**
109.	The trigger level is outside the set measurement range. Or: While writing to a buffer, the value to be written is outside the range -4.88...+4.88. Example: **SET RANGE 1.0.5** **SETTRIGGER 4** **SELECT +1.1** **INSCAN**
110.	Overflow The measured value exceeds the set range limit.
111.	The scan time set with **SETSCANTIME** is too short. Example: **SETSCANTIM E50E-6** **SELECT +1 ,1; 2, 2** **INSCAN**
121.	When accessing a buffer, the position value is outside the permissible range. Only values from 1 to **BUFLEN** are possible for the position. Example: **BUFREAD 1,0,A**

123.	Buffer memories with different time bases or histories were specified in the **PLOT** command. Only those signal waveforms measured with the same sampling interval and the same histories can be displayed in a single image.
125.	The buffer memory must be prepared with the **BUFOPEN** command before being written to with **BUFWRITE**. Example: **BUFWRITE 1,100,4.02**
130.	More than five channels were specified in the **SELECT** command. Example: **SELECT +1,1;2,2;3,3;4,4;5,5;6,6**
131.	In the **SELECT** command, the signal waveforms of two input channels were assigned to the same buffer. A separate buffer must be reserved for each channel to be measured. Example: **SELECT +1,1;2,1**
135.	The voltage of the batteries in the CE-150 is no longer sufficient to power the MC-12. Connect the AC adapter to the CE-150.

Appendix B

LIST OF FUNCTIONS, CONTROL VARIABLES AND INSTRUCTIONS

Functions

Function	Abbreviation	Remarks	Page
CHA		Current measured value at the specified input channel	42

List of Functions, Control variables and Instructions

Control Variables

Control Variable	Abbreviation	Remarks	Page
BUFFER	**BUFF.**	Buffer value at the current **POSITION** in the specified buffer (in conjunction with **LOADBUFFER**)	65
BUFLEN	**BUFL.**	Buffer length in measured values (set by **BUFINIT**)	53
BUFNUM	**BUFN.**	Buffer count (set by **BUFINIT**)	53
POSITION	**POS.**	Position within the buffer (in conjunction with **LOADBUFFER**)	65
PREHIST	**PRE.**	Number of history blocks (in conjunction with **SETPREHIST**)	54
RANGE	**RANG.**	Range limit at the specified input channel (in conjunction with **SETRANGE**)	40
SCANTIME	**SC.**	Sampling time (in conjunction with **SETSCANTIME**)	56
TRIGGER	**TRI.**	Trigger level in volts (in conjunction with **SETTRIGGER**)	55

Commands

Command	Abbreviation	Remarks	Page
AUTORANGE OFF	**AU. OF.**	Turns on automatic range selection.	41
AUTORANGE ON	**AU. O.**	Turns off automatic range selection.	41
BUFINIT	**BUFI.**	Sets the number of buffers.	51
BUFOPEN	**BUFO.**	Clears the specified write buffer.	63
BUFREAD	**BUFR.**	Assigning a buffer value to a variable	62
BUFWRITE	**BUFW.**	Writes a value at the specified position to the specified buffer.	64
INCHA	**INC.**	Assigning the current measured value to a variable	42
INFUNCTION	**INF.**	Assigning the current, transformed measured value to a variable. The transformation function is specified using the SETFUNCTION command.	44
INIT B	**INI. B**	Initializes the measuring system for bipolar mode.	37
INIT U	**INI. U**	Initializes the measuring system for unipolar mode.	37
INIT	**INI.**	Initializes the measuring system without changing the operating mode.	37
INSCAN	**INS.**	Starts an indirect measurement.	58
LOADBUFFER	**LOA.**	Writes the entire specified buffer with the specified function.	65
MCOFF	**MCOF.**	Turns off the analog part of the HC-12.	38

MCON	**MCO.**	Turns on the analog part of the HC-12.	38
MULTIMETER	**MU.**	Starts the MULTIMETER dialog program	21
OUTCHA	**OU.**	Applies the specified voltage to the specified output channel.	49
OUTSCREEN	**OUTS.**	Outputs measured values stored in a buffer to a connected oscilloscope.	71
PLOT	**PL.**	Outputs measured values stored in one or more buffers to the CE-150 plotter.	73
RELAY OFF	**REL. OF.**	Turns off the specified remote switch on the CE-150.	49
RELAY ON	**REL. O.**	Turns on the specified remote switch on the CE-150.	49
SCREEN	**SCR.**	Calls up the CMOS screen menu (only with an oscilloscope connected).	71
SCREEN OFF	**SCR. OF.**	Turns off the screen display (only with an oscilloscope connected).	70
SCREEN ON	**SCR. O.**	Turns on the screen display (only with an oscilloscope connected).	70
SELECT	**SE.**	Selects input channels for indirect measurements and assigns buffer memory to them.	57
SETFUNCTION	**SETF.**	Defines a function that is used to transform the current measured value in the INFUNCTION command.	43
SETPREHIST	**SETP.**	Specifies the number of history blocks to capture.	54
SETRANGE	**SET.**	Sets the measuring range limit on the specified input channel.	40
SETSCANTIME	**SETS.**	Specifies the sampling time for indirect measurements.	55

SETTRIGGER	**SETT.**	Sets the trigger level for indirect measurements.	55
SWITCH OFF	**SW. OF.**	Turns off the specified analog switch.	48
SWITCH ON	**SW. O.**	Turns on the specified analog switch.	48
TRANSREC	**TRA.**	Loads the BASIC program TRANSIENTRECORDER into the program memory of the PC-1500.	25

Appendix C

ADJUSTING THE MC-12

The MC-12 is delivered calibrated for bipolar operation. If you wish to operate in unipolar mode, the MC-12 must be adjusted to this mode using an adjustment potentiometer.

For adjustment you need an adjustable voltage source and a digital voltmeter with 3 1/2, but preferably 4 1/2 digits.

Unipolar adjustment

- Enter the command **`INITU,`** <ENTER>.
- Enter **`MULTI`**, <ENTER> in RUN mode - the multimeter is in operation.
- Apply a voltage of +4.942V to channel 1.

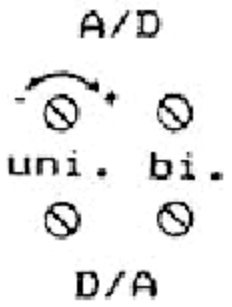

Figure C-1: Adjustment potentiometer on the MC-12

- If **OVERFLOW** is displayed: Adjust the potentiometer with a screwdriver to the left (counterclockwise) until the display flickers

  OVERFLOW < - > 4.92V

- If voltage value is displayed: Turn the potentiometer to the right until flickering display

  OVERFLOW < - > 4.92V

If you want to change the system from unipolar back to bipolar, the same potentiometer must be adjusted again.

Bipolar adjustment

- Enter the command **INITB** <ENTER>.
- Press **MULTI.** <ENTER> in RUN mode - multimeter is in operation.
- Apply a voltage of +4.922V to channel 1.
- If **OVERFLOW** is displayed: Adjust the potentiometer (see Figure C-1) with a screwdriver to the left (counterclockwise) until the display flickers

  OVERFLOW < - > 4.88V

- If voltage value is displayed: Turn the potentiometer to the right until flickering display

  OVERFLOW < - > 4.88V